ITEM #

MODEL #

NAME #

SIS #

AIA #

Planetary Mixers
Planetary Mixer, 5 lt. - Electronic



602223 (DMX5_AU) Dmix planetary mixer white, 5 liters, bowl detection device, electronic variable speed with K type accessory hub. Equipped with stainless steel semi spiral hook, paddle and whisk and highly resistant safety screen, BPA free - Australia

Short Form Specification

Item No.

Suitable for all kneading, blending and whipping operations. Metal body and large base for complete stability. 5,5 litre capacity 18/10 (AISI 304) stainless steel bowl with 2 handles. Universal motor with electronic speed variation from 40 to 240 rpm (planetary movement), driving the whisk up to 500 rpm. Removable/transparent solid safety screen - made of a bisphenol-A free (BPA) copolyester - activates the raising and lowering of the bowl. Bowl detection device allows the mixer to switch on only when the bowl and the safety screen are properly installed and positioned together. Equipped with accessory drive hub type k (accessories are not included). Supplied with 3 stainless steel tools: semi-spiral hook, paddle and whisk.

APPROVAL:

Main Features

- Electronic speed variator.
- Removable safety screen activates the raising and lowering of the bowl.
- Delivered with:
  - Paddle, Semi-spiral Hook, Wire Whisk and Mixing Bowl for 5,5 lt
  - K type accessory drive hub (accessories are not included)
- Tools shape and size perfectly adapt to the bowl for uniform mixing of even small quantities.
- Small, compact planetary mixer designed to whisk and mix, providing also good kneading results.
- Maximum capacity (flour, with 60% of hydration) 0,75 kg.
- Bowl detection device allows the mixer to switch on only when the bowl and the solid safety screen are properly installed and positioned together.

Construction

- Power: 500 Watts.
- Variable speed from 40 to 240 rpm (planetary movement), to adjust to the selected tool and mixture hardness.
- Water protected planetary system (IP55 electrical controls, IP34 appliance overall).
- Universal powerful motor with high start-up torque and overload protection.
- Transparent solid safety screen made of Eastman Tritan™ copolyester BPA free, impact resistant and stays clear and durable after several dishwashing cycle. Eastman&Tritan are trademarks for Eastman Chemical Company.
- Compact design.
- Semi-spiral hook, paddle and wire whisk in stainless steel.
- 304 AISI stainless steel bowl with 2 handles - 5,5 lt capacity.
- Variable speed rotation of the tools from 84 rpm to 500 rpm.

Included Accessories

- 1 of ST.STEEL BOWL+2 HANDLES 5LT FOR MIXER PNC 653754
- 1 of S/S SEMI-SPIRAL DOUGH HOOK FOR 5LT MIXER PNC 653755
- 1 of S/S PADDLE FOR 5LT MIXER PNC 653756
- 1 of S/S WHISK FOR 5LT MIXER PNC 653757

Optional Accessories

- MEATMINCER 60MM FOR K HUB 1 DISC PNC 653043 ❑
- 3 DISCS (3-4,5-8 MM DIAMETER) MEATMINCER PNC 653044 ❑
- PASTA KIT ACCESSORY (LASAGNE 142,5MM) PNC 653296 ❑
- PASTA KIT ACCESSORY (SPAGHETTI 2MM) PNC 653298 ❑
- PASTA KIT (LASAGNE, TAGLIATELLE, TAGLIOLINI) PNC 653300 ❑
- ST.STEEL BOWL+2 HANDLES 5LT FOR MIXER PNC 653754 ❑
- S/S SEMI-SPIRAL DOUGH HOOK FOR 5LT MIXER PNC 653755 ❑
- S/S PADDLE FOR 5LT MIXER PNC 653756 ❑
- S/S WHISK FOR 5LT MIXER PNC 653757 ❑

The company reserves the right to make modifications to the products without prior notice. All information correct at time of printing.

Planetary Mixers
Planetary Mixer, 5 lt. - Electronic

Front

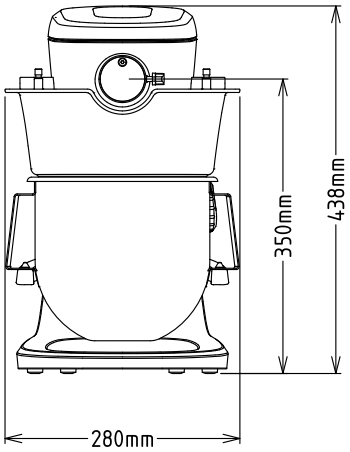

Side

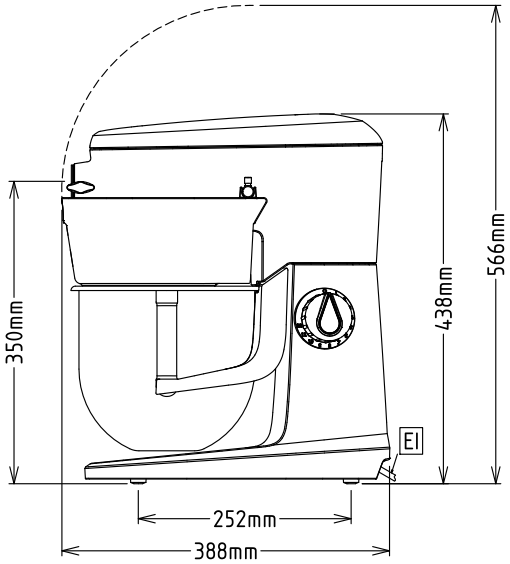

EI = Electrical inlet (power)

Top

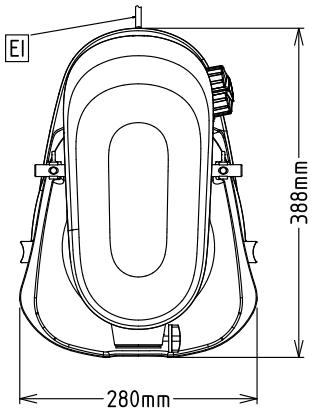

Electric	
Supply voltage:	200-240 V/1N ph/50/60 Hz
Electrical power max.:	0.5 kW
Total Watts:	0.5 kW
Capacity:	
Performance (up to):	0.75 kg/Cycle
Capacity:	5.5 litres
Key Information:	
External dimensions, Width:	280 mm
External dimensions, Depth:	388 mm
External dimensions, Height:	438 mm
Shipping weight:	15.6 kg
Net weight (kg):	11
Cold water paste:	0.75 kg with Semi spiral hook
Egg whites:	12 with Whisk

The company reserves the right to make modifications to the products without prior notice. All information correct at time of printing.

2026.11.19